TABLE OF CONTENTS

SECURITY PANEL SYSTEM

S-1 Description

S-2 General Specifications

S-3 Materials of Construction

S-4 Operation & Maintenance

S-5 Metric & Imperial Outputs for Security Panels

S-6 Flush Mounted Security Radiant Panel

S-7 Dropped Security Radiant Panel to Enclose Heating Mains

S-8 Access Panel and Piping Details

S-9 Angle Mounted Security Radiant Panel

Radiant Panel Installation Instructions

DESCRIPTION

Security panel is a new concept in radiant heating panels. It is a smooth faced steel radiant panel designed and constructed to form a building feature in accordance with architectural requirements. The product can be highlighted to form an architectural feature or more typically, blended into the structure to become a hidden source of efficient heating.

ADVANTAGES

Security ceiling panel system has proven to be the most economical method of heating high security areas. The security panel system is extremely flexible, yet is damage and vandal resistant while virtually maintenance free.

APPLICATIONS

Security panels are used for psychiatric assessment areas in hospitals, youth detention centres, prisons, holding cells, and military police stations.

GENERAL SPECIFICATIONS

Material Specification

The security panel system is a custom designed system that can be recessed or surface mounted in or on columns, walls or ceilings. Hot water supply temperature may be varied depending on the heating performance required. Foil backed batt insulation on the coil or inactive side increases radiant heat transfer.

Panels are fabricated from steel plates 3.5mm thick (10 SWG). Temperature control is as for other hydronic systems; panels may be controlled individually or in zones with control and shut off valves set outside secured areas for easier maintenance. Thermostatic controls, connected to the security panel and arranged to control a zone of panels, can be supplied for setting by the customer to allow areas of a building to be heated as desired.

Dimensions and Weight

The panels are individually designed for a specific installation and are offered in widths of 12", 24" and 48". The steel panels are available in widths from 100mm (4") upward with a maximum panel length of 3048mm (10'). Weight of the operating system is dependent on the design of the system but does not exceed 37 kg/m^2 (7.6 lb/ft^2) and can be as low as 21 kg/m^2 (4.3 lb/ft^2).

Materials of Construction

Pipework: Each panel has its own serpentine pipe coil of 16 mm (5/8") O.D. tubing.

Pipework attachment system: The coil is clipped to an extruded aluminum heat saddle using cadmium plated spring steel clips. The aluminum heat saddle is attached to the panel with steel studs. Heat transfer paste is used at the interface between the aluminum heat saddle and both the steel plate and the tubing.

Panels: Steel security panel system - 3.5mm (10 SWG) cold reduced steel sheet. The radiant panel can be supplied with edges formed to suit the individual installation. Non radiating "in fill" panels can be supplied to form a continuous covering for the wall, column or ceiling.

Paint finish: Panels are supplied in a white electrostatic polyester powder paint.

Insulation: As per consultant's specifications, usually a minimum of 25mm (1") thick foil-backed batt insulation.

OPERATION AND MAINTENANCE

Security panels are incorporated into a building's heating/cooling systems and will remain trouble free provided the following procedures are followed and inspections performed during start up and maintenance.

Operation

Heating mains should be flushed prior to connection to the radiant panels. After connection, the hydronic system should be flushed again and then dry pressure tested to isolate any leaks. Any remaining air should be vented from the system and boiler temperature should be brought up gradually.

Maintenance

Apart from cleaning any strainers, little maintenance should be required on the pipework system. Any descaling of pipework should be carried out in the same way as for other hydronic heating systems. The panels are robust and should resist damage. If for some reason a panel has been damaged, the pipework should be inspected to ensure that no clips have been displaced and that extruded planks are still securely fastened.

Cleaning

The surface of linear panels is best cleaned using an industrial vacuum cleaner to remove dust. However, if the panels become soiled they can be cleaned using a damp cloth and mild detergent.

METRIC AND IMPERIAL OUTPUTS

MWT°C	WATTS/metre^2	MWT°F	BTUH/foot^2
65.6	460	150	141
68.3	490	155	150
71.1	520	160	160
73.9	545	165	171
76.7	580	170	183
79.4	615	175	192
82.2	640	180	202
85.5	680	185	211
87.8	710	190	225
90.6	745	195	234
93.3	770	200	247
96.1	805	205	258
98.9	840	210	273
101.7	875	215	286

Outputs based on 150mm centers and
21°C (70°F) room temperature.

SECURITY PANEL

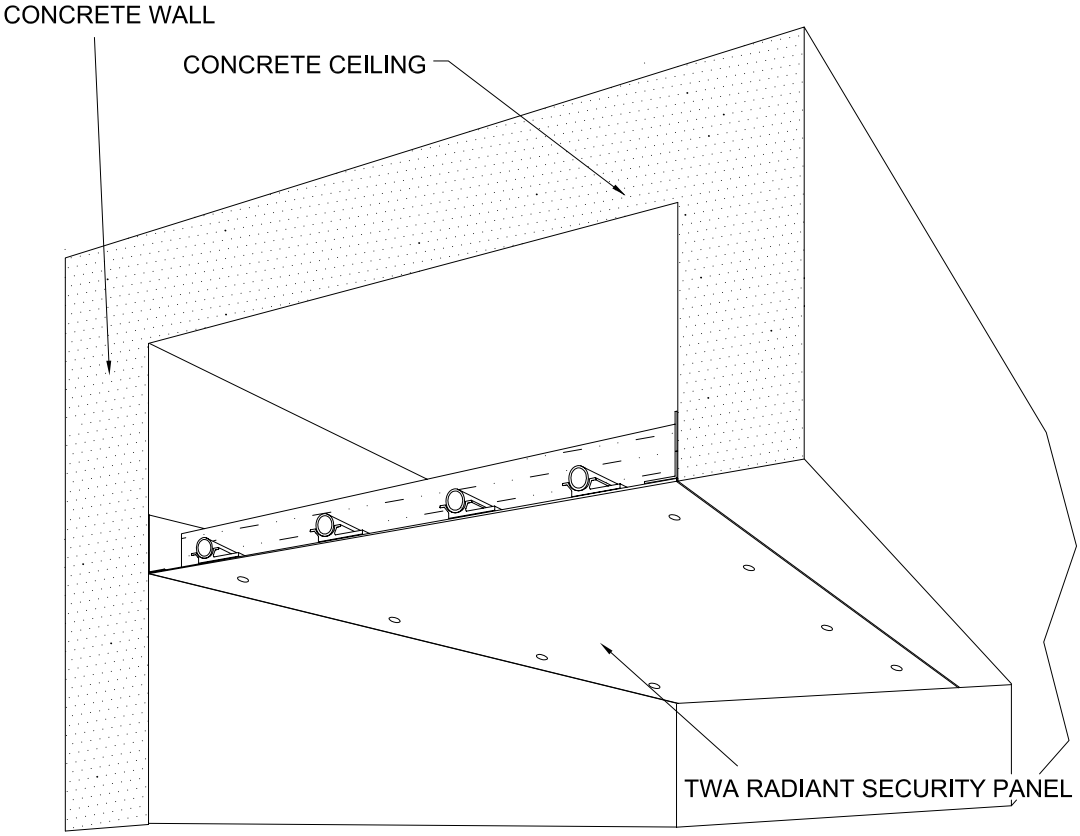

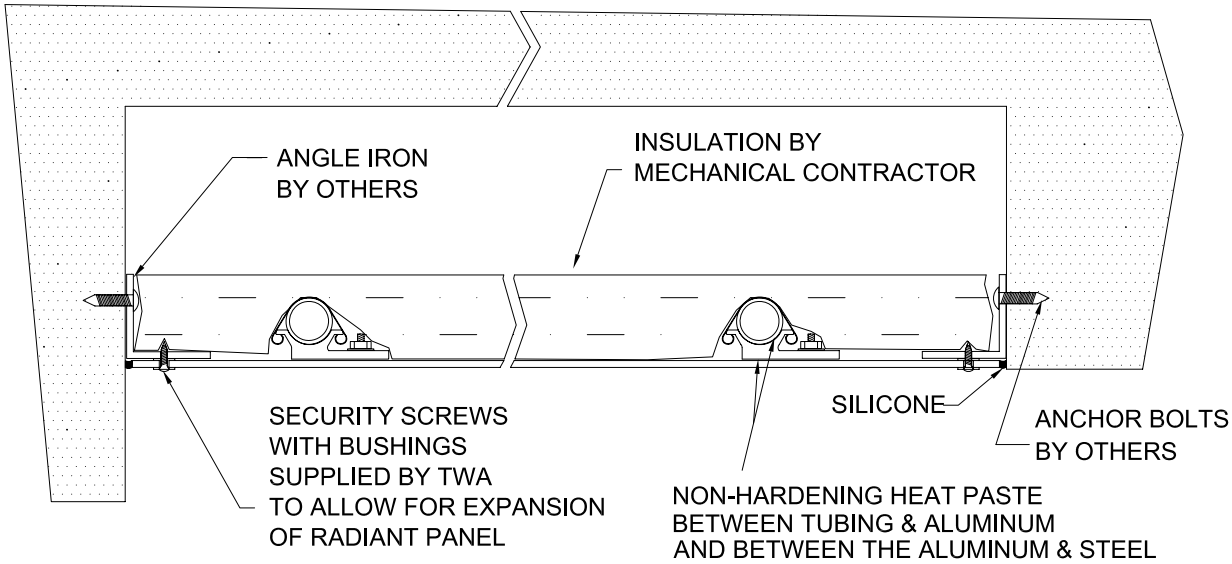

FLUSH MOUNTED SECURITY RADIANT PANEL		
Twa Panel Systems, Inc.	FRENGER®	S-6

SECURITY PANEL

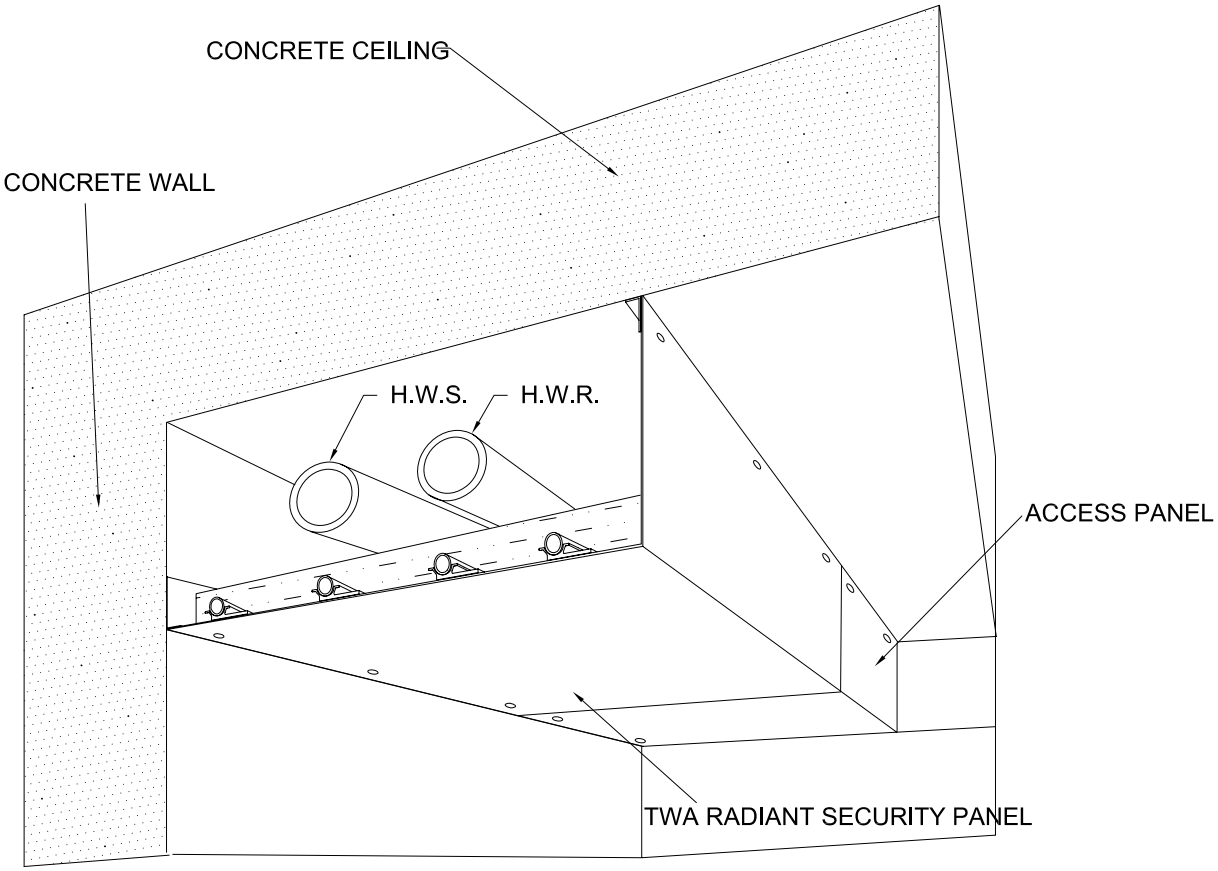

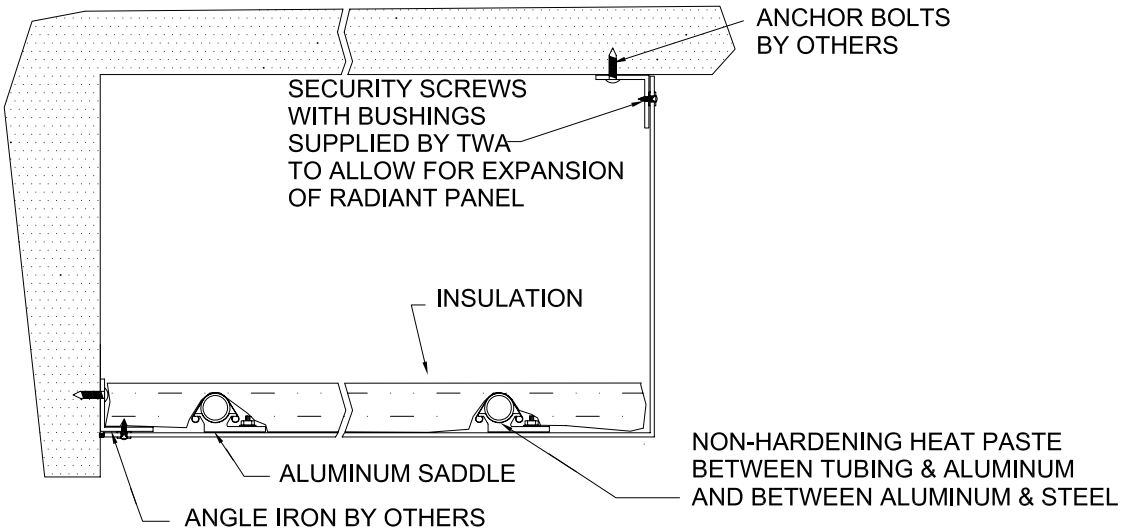

DROPPED SECURITY RADIANT PANEL TO ENCLOSE HEATING MAINS

Twa Panel Systems, Inc. | FRENGER® | S-7

SECURITY PANEL

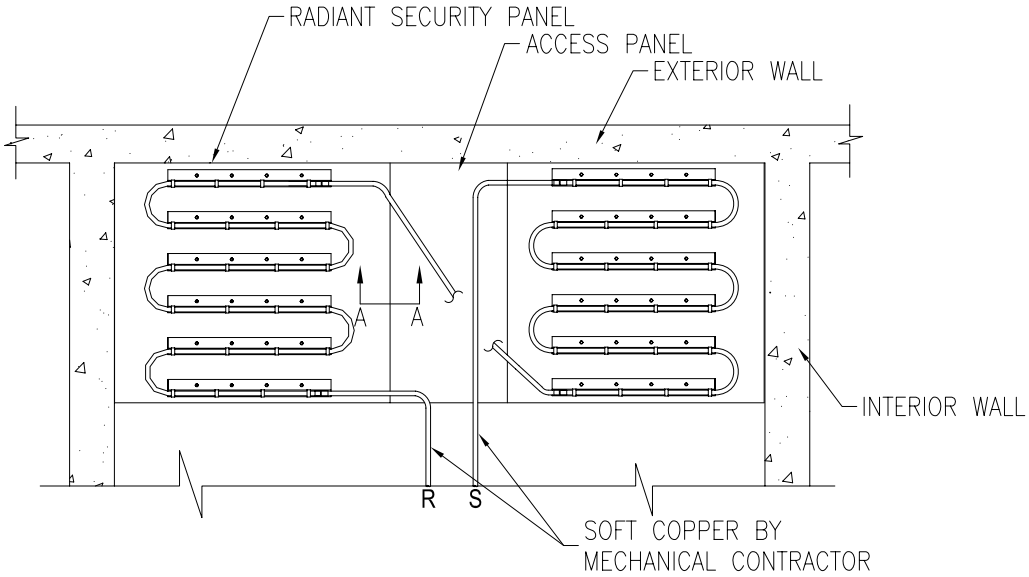

NOTE:
DUE TO WEIGHT OF PANELS, TWO SECURITY PANELS SUPPLIED WITH ACCESS PANEL FOR EASE OF INSTALLATION.

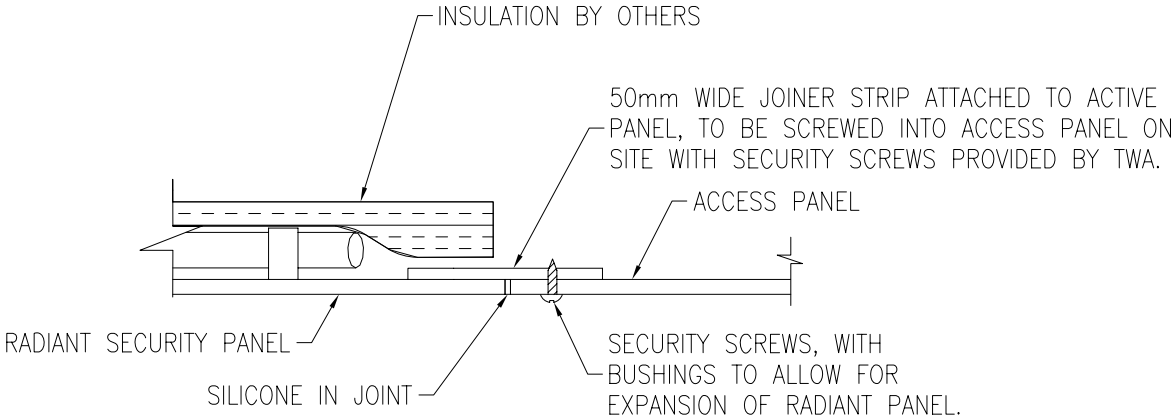

SECTION A-A
TYPICAL INTERFACE BETWEEN PANEL AND ACCESS PANEL

ACCESS PANEL AND PIPING DETAILS		
Twa Panel Systems, Inc.	FRENGER®	S-8

SECURITY PANEL

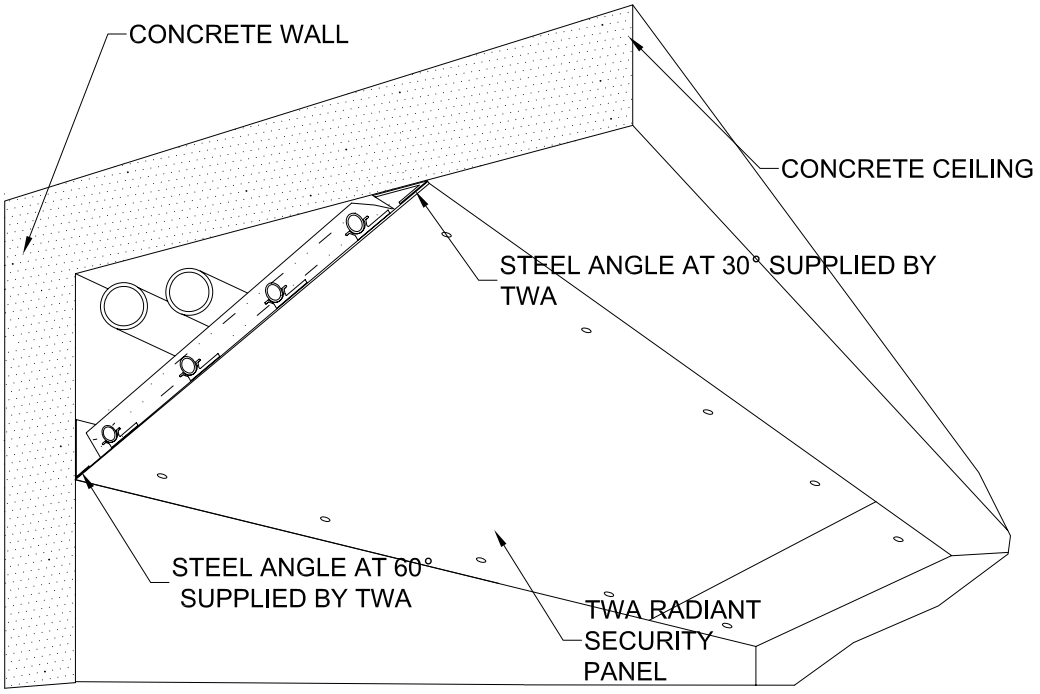

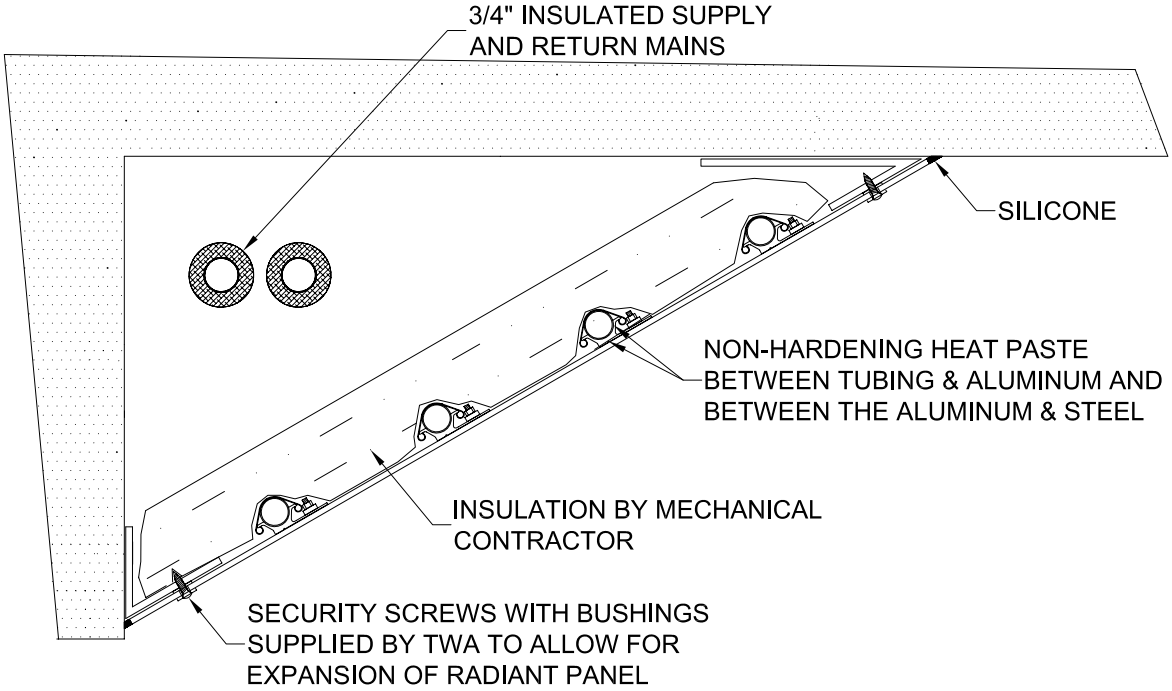

ANGLE MOUNTED SECURITY RADIANT PANEL

Twa Panel Systems, Inc. | FRENGER | S-9

SECURITY PANEL

INSTALLATION INSTRUCTIONS

Twa security radiant heating panels are finished with electrostatic polytester powder paint. However, the panel surface must not come in contact with bare skin. Perspiration or grease from an ungloved hand can potentially leave a mark on the panel.

INSTALLATION PERSONNEL MUST WEAR CLEAN WHITE GLOVES WHEN HANDLING THE RADIANT PANELS.

USE A HEAT PAD BETWEEN RADIANT PANEL AND COPPER PIPE WHEN MAKING SOLDER CONNECTION. EXCESSIVE HEAT CAN DAMAGE THE PAINT FINISH.